KaDeck

Versatile air conditioning for offices and administration buildings.

Technical Catalogue

KAMPMANN

Kampmanngroup.com/kadeck

Contents

KaDeck: Versatile air conditioning for offices and administration buildings.

The KaDeck is a visually unobtrusive room heating and cooling unit. It can also supply fresh air if required.

01 Product information

KaDeck – versatile air conditioning for existing and new offices

Cooling loads are produced in offices with extensive glazing in which many people work and cannot be removed without an air conditioning system. KaDeck offers versatile ceiling-mounted air conditioning for heating and cooling in these situations.

Flexibility regarding the installation location is an increasingly important factor in new and existing buildings. Kampmann KaDeck units stand out from the crowd on account of their versatility. They are available as wall-mounted units with one-sided air outlet, or with two-sided air outlet for installation in the centre of a room. The design cover panel is available in different colours depending on the customer requirements. The dimensions are designed to enable the units to be installed within a false ceiling grid (either 625x625 or 600x600). The installation height of 165 mm is generally designed for situations where space is tight in the ceiling.

Variable comfort solution
Apart from versatility, aesthetic appearance and power, low noise levels and draught prevention are key benefits.

These aspects are a matter of course at Kampmann and have been incorporated for many years, among other things in the company's Katherm product. The Kampmann in-house research and development centre was able to incorporate and evolve the company's decade-long experience into this concept.

Hygiene and maintenance

It is crucial that air conditioning systems also work just as well after years of operation as they did on the first day of commissioning. The internal design provides for ease of cleaning, thus guaranteeing hygienically perfect air conditioning even after years.

The design cover panel is simply folded open and all the components are visible without the need for further disassembly. The valve and the flexible connection are within the unit and remain accessible at all times. There is therefore no need for additional maintenance access openings on site. However reduced investment costs is not the only benefit.

Over time, separate maintenance access panels can often become damaged and dirty by constant opening and closing. The access panel of the KaDeck is designed for frequent opening and closing. The hinges and locks are designed and manufactured to the "industry standard", yet are also concealed and do not detract from the appearance of the cover panel.

Examples: Colour options for the design cover panel

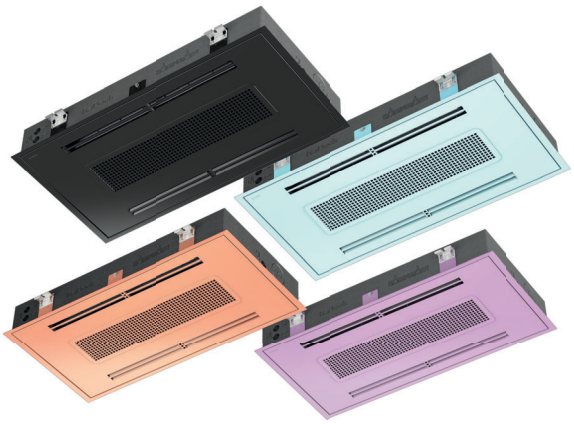

Product data

Product benefits

- Low suspended ceiling heights needed, installation height of only 165 mm
- All components (including valves) can be accessed without tools, no service hatches needed on site
- Thermally and acoustically insulated housing made of EPP (expanded polypropylene)
- Internal surfaces are organically shaped, without corners, for simplified cleaning in accordance with VDI 6022
- Very quiet condensate pump (less than 20 dB(A)), speed, flow rate is ideally adapted to the volume of condensate produced
- Design ceiling panel RAL 9016 (traffic white), other colours are optionally possible
- Life Cycle Assessment data published in the form of an EPD according to EN 15804 and available to download from the International EPD System. Registered in the DGNB Navigator construction product platform.

Features

- Optionally available for 625x625 mm or 600x600 mm ceiling grids
- Infeed of up to 120 m³/h of primary air is possible
- Valve kits, pre-adjustable or differential pressure-independent, optionally available
- Continuously variable, energy-saving EC tangential fans
- Optional dry cooling or wet cooling model

Installation	Ceiling-mounted
Primary air supply	Optionally possible by way of accessories
Heating	LPHW
Cooling	CHW
KaControl	Optional

Performance data

Cooling output [W][1]	307 – 3010
Heat output [W][2]	468 – 5852
Air flow [m³/h]	39 – 415
Sound pressure level [dB(A)][3]	13 – 42

[1] at CHW 7/12 °C, t_{L1} = 27 °C, 48% relative humidity
[2] at LPHW 75/65 °C, t_{L1} = 20 °C
[3] The sound pressure levels were calculated with an assumed room insulation of 8 dB(A).

Operating limits

- Max. operating pressure: 16 bar
- Max. entering water temperature: 75 °C
- Min. water inlet temperature, dry cooling: above the dew point
- Max. air inlet temp.: 35 °C
- Max. glycol volume: 50 %

Applications

Buildings of all kinds, which require whisper-quiet cooling or heating from a visually discreet design.

Selection guide

Version	Air outlet	System	Cooling output (dry)[1] [W]	Cooling output (wet)[2] [W]	Heat output[3] [W]	Grid dimensions	Dimensions Width (A) [mm]	Length (B) [mm]	Height (C) [mm]
wet cooling	one-sided air outlet	2-pipe	134 – 752	346 – 1666	610 – 3247	600 x 600 mm 625 x 625 mm	598 620	1198 1240	165
		4-pipe	132 – 646	307 – 1348	468 – 1664				
	two-sided air outlet	2-pipe	244 – 1364	641 – 3010	1113 – 5852				
		4-pipe	243 – 1173	573 – 2442	868 – 3091				
dry cooling	one-sided air outlet	2-pipe	134 – 752	---	610 – 3247				
		4-pipe	132 – 646		468 – 1664				
	two-sided air outlet	2-pipe	244 – 1364		1113 – 5852				
		4-pipe	243 – 1173		868 – 3091				

1) at CHW 16/18, t_{L1} =27 °C, 48% relative humidity
2) at CHW 7/12 °C, t_{L1} = 27 °C, 48% relative humidity
3) at LPHW 75/65 °C, t_{L1} = 20 °C

Technical drawing (Dimensions in mm)

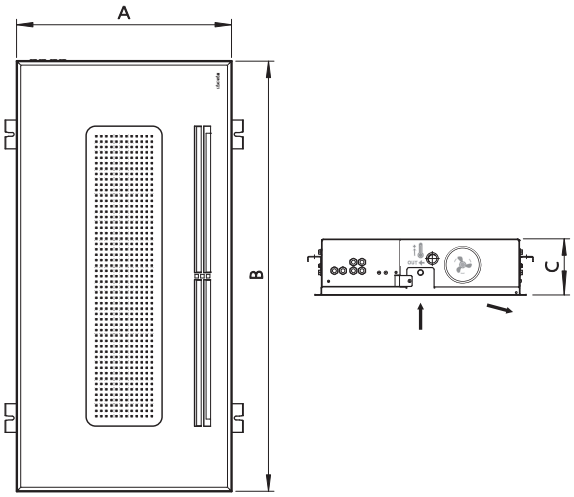

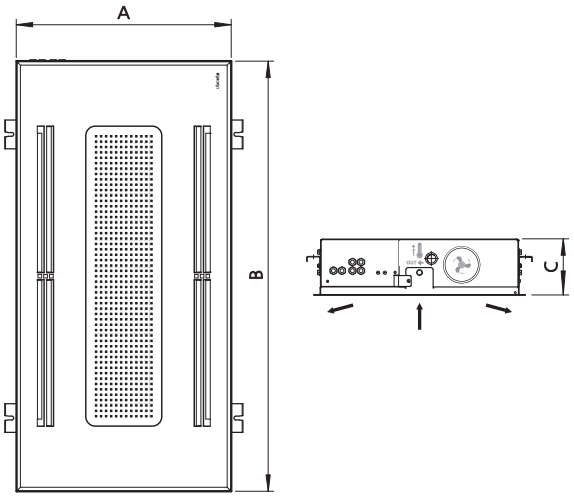

KaDeck at a glance

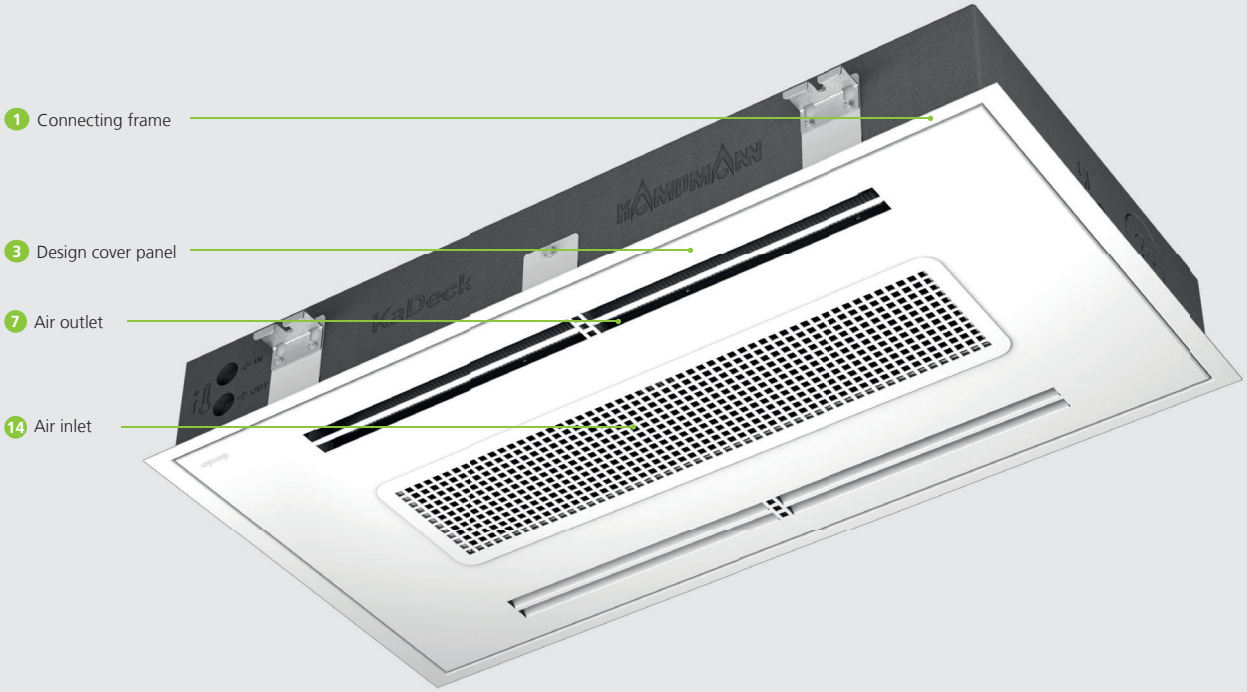

Features

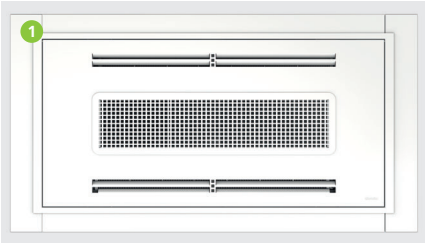

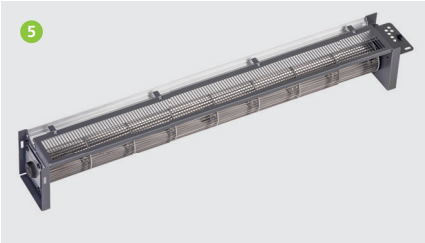

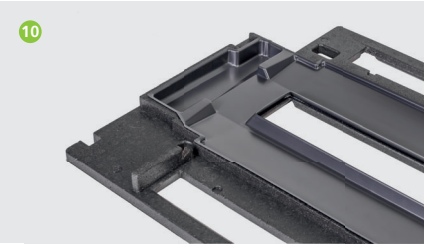

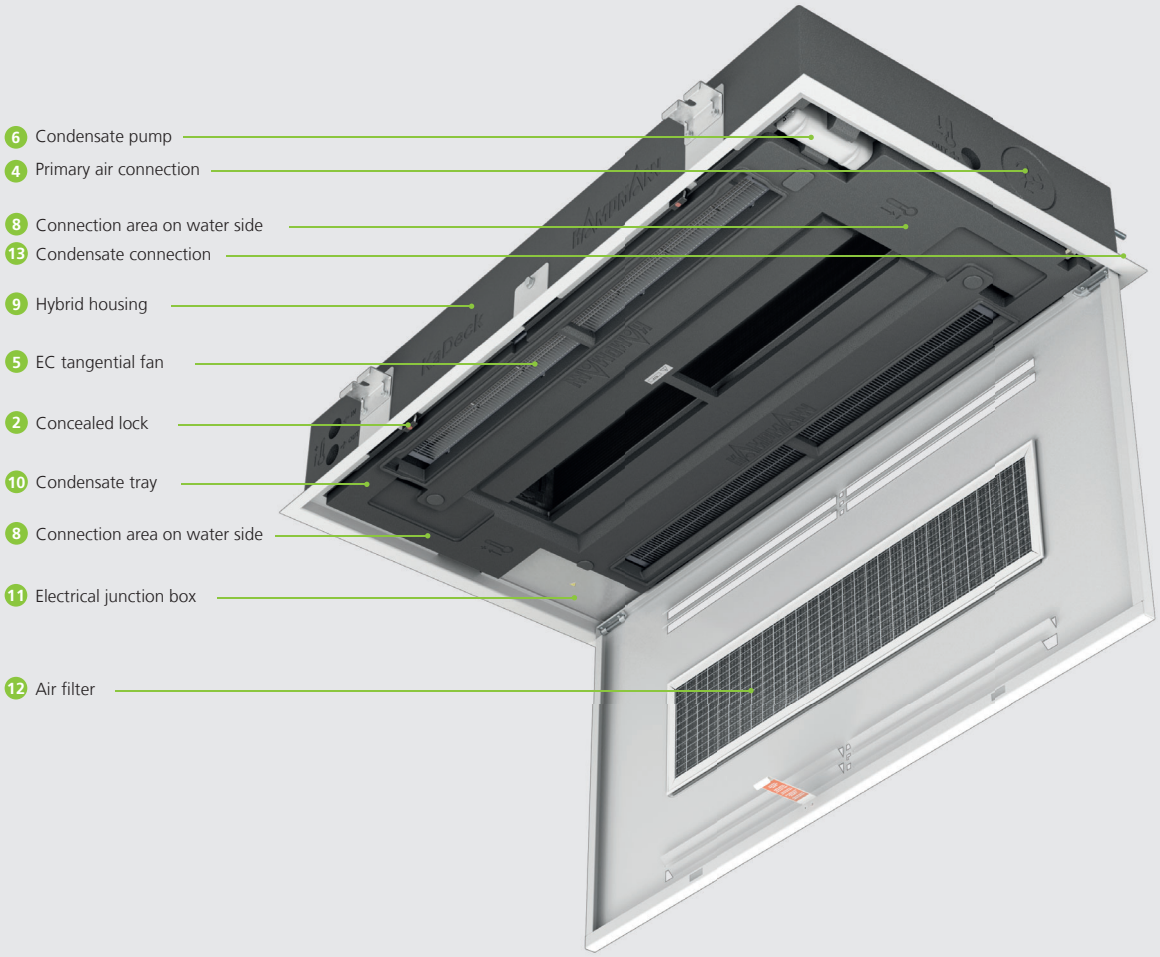

1 Connection frame and ceiling panel:
- Suitable for 600x600 or 625x625 ceiling grid
- RAL 9016 (traffic white) ceiling panel and frame, customised colour on request
- Ceiling panel can be opened without tools, industrial-quality hinges and closures for an extremely long service life
- Internal cleanable ISO Coarse air filter to protect internal components from dust

2 Easy to install and maintain
- Complete with ceiling panel that can be opened without tools and condensate tray
- Additional on-site maintenance access openings not required
- All components can be accessed once the condensate tray has been removed.
- All surfaces along which air flows can easily be cleaned
- Valve installation (adjustable 2-way or differential pressure-independent) within the housing

3 Connection and operational safety
- Unit design and component selection optimised for ease of assembly and operation
- Total weight of unit reduced to 60% of comparable unit made of sheet steel, for ceiling installation which is gentle on the back
- Connection areas in the EPP, with labels for supply/return and primary air

4 Primary air connection
- Primary air can be introduced at a rate of up to 120 m³/h via the KaDeck
- 2 spigots can be connected on each head side
- EPP closures can easily be removed, and optional 80 mm connection spigots for on-site primary air can be inserted
- Primary air is directed through the heat exchanger for temperature control

5 Durable EC tangential fan
- Noise-optimised, smooth-running 3-wire, infinitely variable energy-efficient EC motor
- Horizontal tangential roller, EPP/aluminium contour aerodynamically optimised in the CFD
- Utility model-protected bypass motor cooling to prevent the build-up of heat in heating mode and increase the service life of the motor by 40%

6 Condensate pump
- Included in the wet cooling configuration package
- Compact design, without separate float, prevents possible leaks at connections.
- Extremely smooth-running pump (sound power below 20 dB(A)), fan speed and flow rate adapts to the condensate level in the pump sump
- The condensate level is determined by a capacitive sensor, which eliminates no possibility of the float switch sticking.
- Maximum delivery height up to 6 m
- Alarm contact in the event of a malfunction or excessively high water level in the condensate tray

9 Hybrid housing made of sheet steel and EPP (expanded polypropylene)
- Rigidity and strength, thanks to galvanised steel frame
- Foamed EPP carcass free of heat bridges provides thermal and acoustic insulation
- Organic internal contours for straightforward cleaning

10 Condensate tray
- Condensate tray can be removed without tools for cleaning and maintenance
- Made of EPP for thermal and acoustic isolation
- Parts that come into contact with condensate are made of ABS plastic which is suitable for disinfectant
- Gradient on all sides allows all condensate to quickly run off from the section through which air flows

02 Technical data

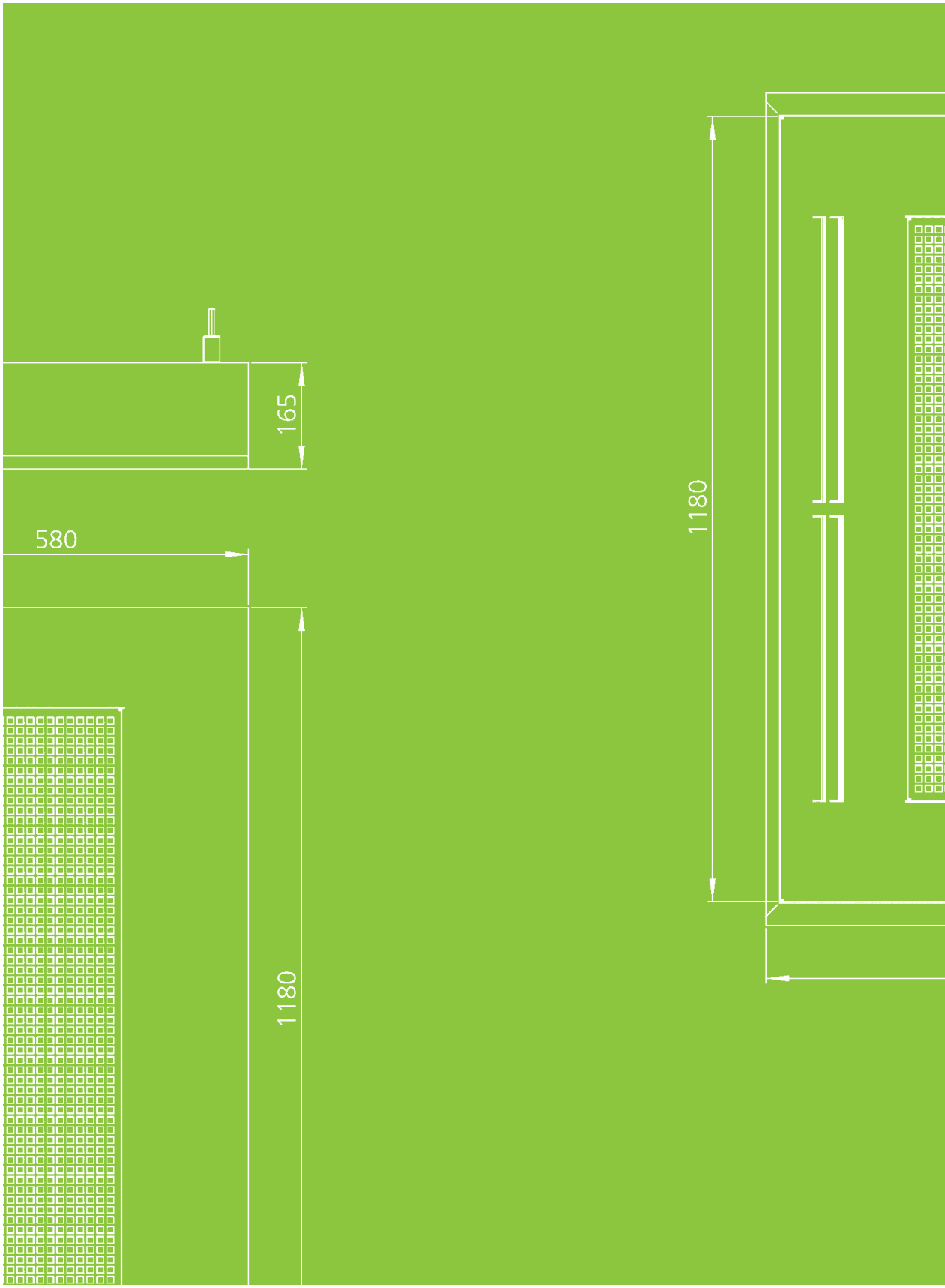

Advice on measuring conditions

The cooling and heat outputs have been calculated in accordance with DIN EN 1397:2015 "Water-air fan coils, test methods for establishing the performance".

The specific requirements for cooling and heating mode are taken into account in DIN EN 1397. They are also based on Eurovent certification.

Normative reference

The standard refers to:

- EN 16583; Determining the sound power levels of noise sources
- EN 45001; General criteria for the operation of test laboratories
- ISO 5801; Industrial fans; Performance testing using standardised airways
- ISO 5221; Air distribution and air diffusion; Rules to methods of measuring air flow rate in an air handling duct

The air intake temperature of the fan coil is selected as the reference/air temperature, and should not be confused with the room temperature.

In practice, fan coils are positioned within a suspended ceiling or as sill units along the façade. Due to the temperature stratification that occurs, the air intake temperature differs from the room air temperature (measured at a height of 1.5 m).

Acoustics

Fan coils are very often used in acoustically sensitive areas. The units have therefore have a noise-optimised design.

The acoustic data was recorded in accordance with the provisions of DIN EN 16583 by DIN EN ISO 3744 and DIN EN ISO 3741 in the Kampmann GmbH laboratories.

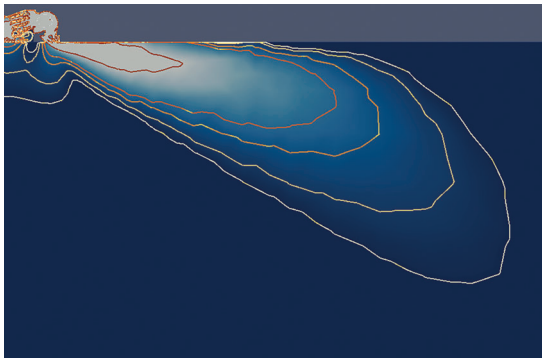

CFD simulation

KaDeck

Air outlet one-sided air outlet
dry cooling

Technical drawing (Dimensions in mm)

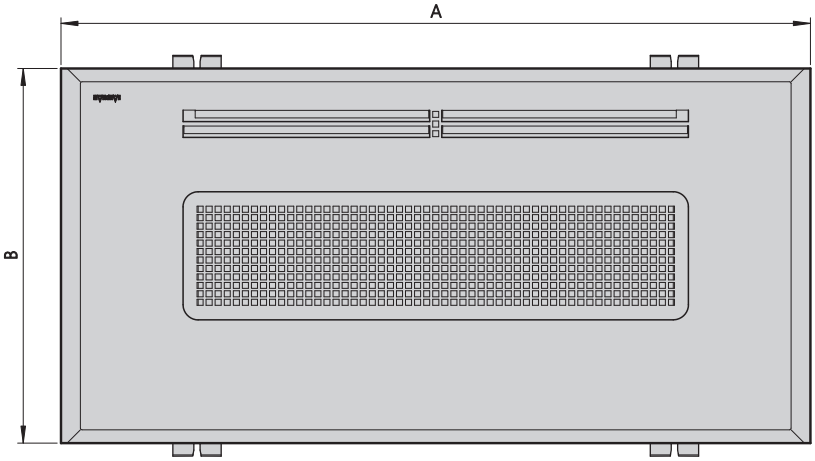

I

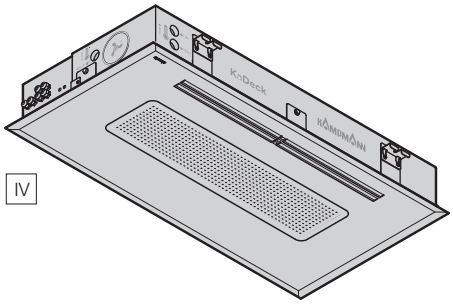

IV

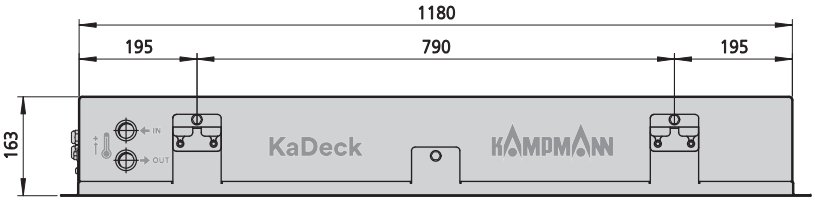

II

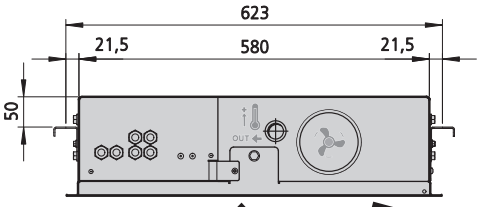

III

View

I View from below
II Front view
III side view
IV isometric view

Specifications

Article no.	System	Grid dimensions	Length (A) [mm]	Width (B) [mm]	heating water content [l]	cooling water content [l]	Weight [kg]
326116211111*	2-pipe	600 x 600 mm	1198	598	---	1	24
326116411111*	4-pipe	600 x 600 mm	1198	598	0.2	0.8	24
326126211111*	2-pipe	625 x 625 mm	1240	620	---	1	24
326126411111*	4-pipe	625 x 625 mm	1240	620	0.2	0.8	25

Performance data

System	Air outlet	Control voltage	Air flow	Cooling output, total[1]	Cooling output, sensible	Outlet air temperature	Mass Flow cooling	Pressure loss cooling	Heat output[2]	Outlet air temperature	Mass Flow heating	Pressure loss heating	Power consumption	Current consumption	Sound pressure level[3]	Sound power level
		[V]	[m³/h]	[W]	[W]	[°C]	[l/h]	[kPa]	[W]	[°C]	[l/h]	[kPa]	[W]	[mA]	[dB(A)]	[dB(A)]
2-pipe	one-sided air outlet	10	232	752	752	17.0	323	46.0	3247	62.1	286	35.6	12	141	39	47
		8	199	659	659	16.7	283	36.6	2820	62.6	249	27.9	10	117	34	42
		6	138	475	475	16.3	204	20.7	1998	63.8	176	15.3	6	85	25	33
		4	76	263	263	16.2	113	7.4	1144	65.6	101	5.8	5	69	16	24
		2	39	134	134	16.2	58	2.3	610	67.4	54	2.0	4	69	13	21
4-pipe	one-sided air outlet	10	232	646	646	18.4	278	29.2	1664	41.6	147	1.7	12	141	39	47
		8	199	566	566	18.2	244	23.3	1505	42.7	133	1.4	10	117	34	42
		6	138	408	408	17.8	175	13.2	1172	45.7	103	0.9	6	85	25	33
		4	76	238	238	17.2	102	5.2	770	50.7	68	0.4	5	69	16	24
		2	39	132	132	16.4	57	1.9	468	56.4	41	0.2	4	69	13	21

Use our calculation tools on our website to easily calculate heat outputs and other technical data with just a few clicks!
▸ https://www.kampmanngroup.com/hvac/products/fan-coils/kadeck#Calculate-performance-data

1) at CHW 16/18, t_{L1} =27 °C, 48% relative humidity
2) at LPHW 75/65 °C, t_{L1} = 20 °C
3) The sound pressure levels were calculated with an assumed room insulation of 8 dB(A). This corresponds to a distance of 2 m, a room volume of 100 m³ and a reverberation time of 0.5 s (in accordance with VDI 2081)

KaDeck

Air outlet one-sided air outlet wet cooling

Technical drawing (Dimensions in mm)

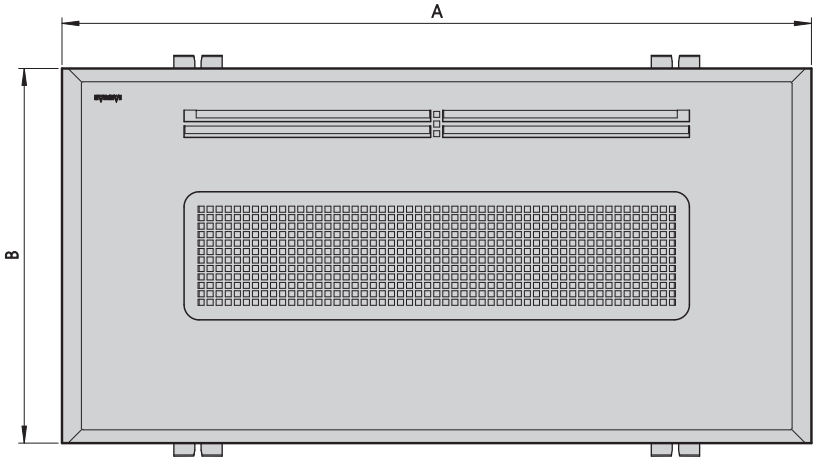

I

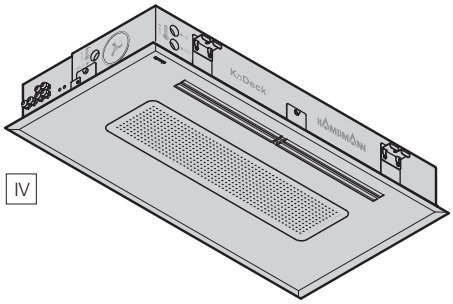

IV

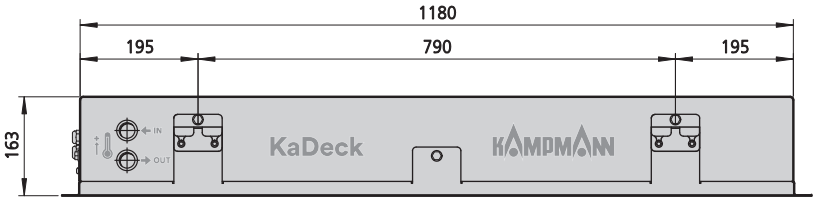

II

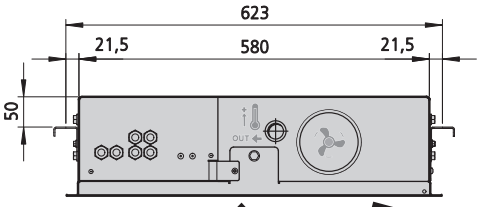

III

View

I View from below
II Front view
III side view
IV isometric view

Specifications

Article no.	System	Grid dimensions	Length (A) [mm]	Width (B) [mm]	heating water content [l]	cooling water content [l]	Weight [kg]
326116261111*	2-pipe	600 x 600 mm	1198	598	---	1	24
326116461111*	4-pipe	600 x 600 mm	1198	598	0.2	0.8	25
326126261111*	2-pipe	625 x 625 mm	1240	620	---	1	25
326126461111*	4-pipe	625 x 625 mm	1240	620	0.2	0.8	25

Performance data

System	Air outlet	Control voltage	Air flow	Cooling output, total[1]	Cooling output, sensible	Outlet air temperature	Mass Flow cooling	Pressure loss cooling	Heat output[2]	Outlet air temperature	Mass Flow heating	Pressure loss heating	Power consumption	Current consumption	Sound pressure level[3]	Sound power level
		[V]	[m³/h]	[W]	[W]	[°C]	[l/h]	[kPa]	[W]	[°C]	[l/h]	[kPa]	[W]	[mA]	[dB(A)]	[dB(A)]
2-pipe	one-sided air outlet	10	232	1666	1154	11.6	286	37.3	3247	62.1	286	35.6	12	141	39	47
		8	199	1451	1006	11.3	249	29.3	2820	62.6	249	27.9	10	117	34	42
		6	138	1036	718	10.8	178	16.3	1998	63.8	176	15.3	6	85	25	33
		4	76	608	416	9.9	104	6.5	1144	65.6	101	5.8	5	69	16	24
		2	39	346	230	8.6	59	2.4	610	67.4	54	2.0	4	69	13	21
4-pipe	one-sided air outlet	10	232	1348	965	14.1	232	21.3	1664	41.6	147	1.7	12	141	39	47
		8	199	1179	845	13.9	203	16.9	1505	42.7	133	1.4	10	117	34	42
		6	138	853	609	13.3	147	9.6	1172	45.7	103	0.9	6	85	25	33
		4	76	514	360	12.2	88	4.0	770	50.7	68	0.4	5	69	16	24
		2	39	307	206	10.5	53	1.6	468	56.4	41	0.2	4	69	13	21

Use our calculation tools on our website to easily calculate heat outputs and other technical data with just a few clicks!
▸ https://www.kampmanngroup.com/hvac/products/fan-coils/kadeck#Calculate-performance-data

1) at CHW 7/12 °C, t_{L1} = 27 °C, 48% relative humidity
2) at LPHW 75/65 °C, t_{L1} = 20 °C
3) The sound pressure levels were calculated with an assumed room insulation of 8 dB(A). This corresponds to a distance of 2 m, a room volume of 100 m³ and a reverberation time of 0.5 s (in accordance with VDI 2081)

KaDeck

Air outlet two-sided air outlet dry cooling

Technical drawing (Dimensions in mm)

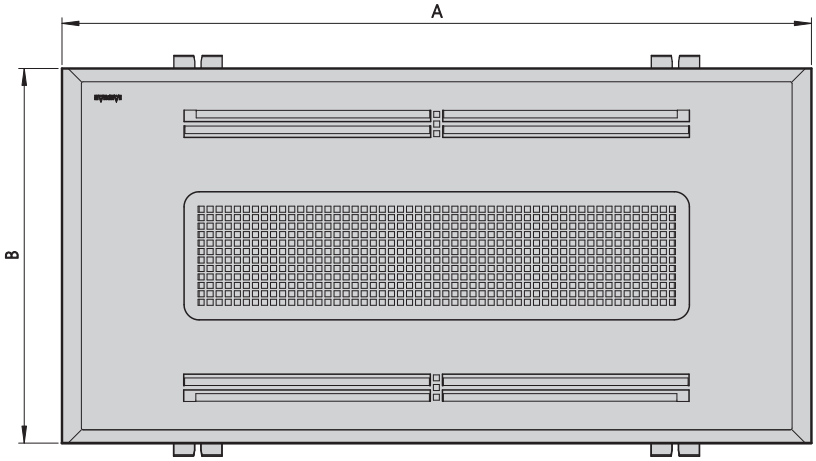

I

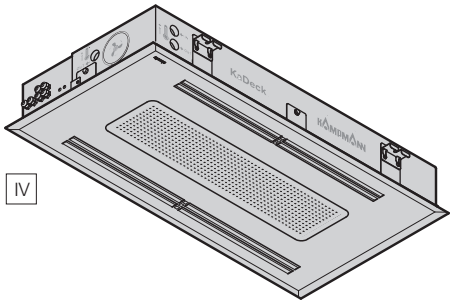

IV

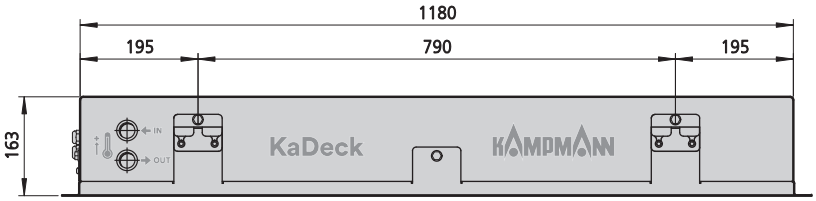

II

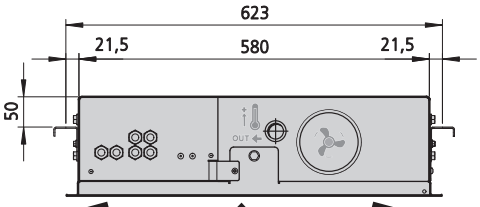

III

View

I View from below
II Front view
III side view
IV isometric view

Specifications

Article no.	System	Grid dimensions	Length (A) [mm]	Width (B) [mm]	heating water content [l]	cooling water content [l]	Weight [kg]
326116212111*	2-pipe	600 x 600 mm	1198	598	---	1.9	28
326116412111*	4-pipe	600 x 600 mm	1198	598	0.4	1.5	28
326126212111*	2-pipe	625 x 625 mm	1240	620	---	1.9	28
326126412111*	4-pipe	625 x 625 mm	1240	620	0.4	1.5	29

Performance data

System	Air outlet	Control voltage	Air flow	Cooling output, total[1]	Cooling output, sensible	Outlet air temperature	Mass Flow cooling	Pressure loss cooling	Heat output[2]	Outlet air temperature	Mass Flow heating	Pressure loss heating	Power consumption	Current consumption	Sound pressure level[3]	Sound power level
		[V]	[m³/h]	[W]	[W]	[°C]	[l/h]	[kPa]	[W]	[°C]	[l/h]	[kPa]	[W]	[mA]	[dB(A)]	[dB(A)]
2-pipe	two-sided air outlet	10	415	1364	1364	16.8	587	38.5	5852	62.5	516	29.5	20	210	42	50
		8	357	1195	1195	16.6	514	30.6	5085	63.0	448	23.1	16	171	37	45
		6	246	854	854	16.2	367	17.1	3607	64.1	318	12.7	10	118	28	36
		4	136	472	472	16.2	203	6.1	2071	65.9	182	4.9	7	88	19	27
		2	70	244	244	16.2	105	1.9	1113	67.7	98	1.7	6	79	15	23
4-pipe	two-sided air outlet	10	415	1173	1173	18.2	504	24.6	3091	42.4	272	1.5	20	210	42	50
		8	357	1027	1027	18.1	442	19.5	2794	43.6	246	1.2	16	171	37	45
		6	246	739	739	17.7	318	11.0	2173	46.6	192	0.8	10	118	28	36
		4	136	433	433	17.1	186	4.4	1426	51.6	126	0.4	7	88	19	27
		2	70	243	243	16.3	104	1.6	868	57.2	77	0.2	6	79	15	23

Use our calculation tools on our website to easily calculate heat outputs and other technical data with just a few clicks!
▸ https://www.kampmanngroup.com/hvac/products/fan-coils/kadeck#Calculate-performance-data

1) at CHW 16/18, t_{L1} =27 °C, 48% relative humidity
2) at LPHW 75/65 °C, t_{L1} = 20 °C
3) The sound pressure levels were calculated with an assumed room insulation of 8 dB(A). This corresponds to a distance of 2 m, a room volume of 100 m³ and a reverberation time of 0.5 s (in accordance with VDI 2081)

KaDeck

Air outlet two-sided air outlet wet cooling

Technical drawing (Dimensions in mm)

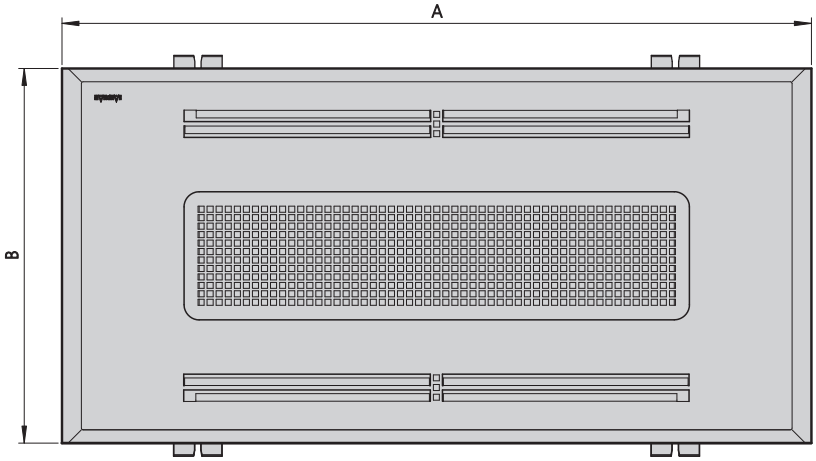

I

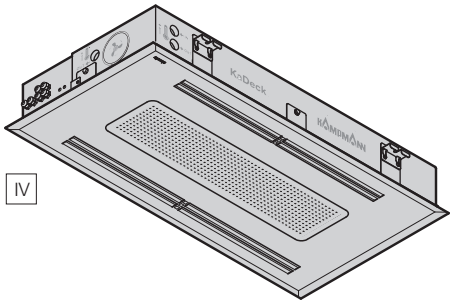

IV

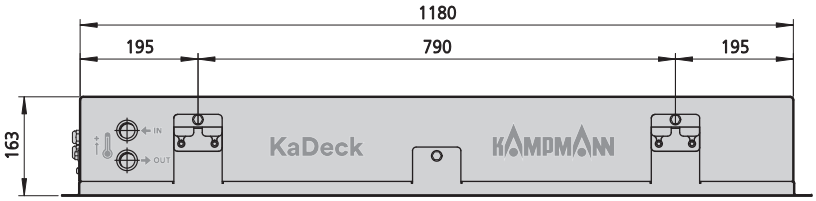

II

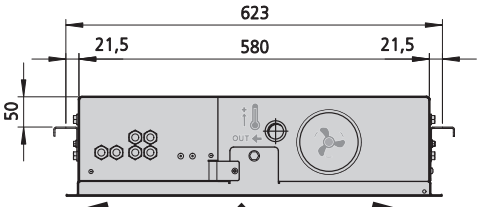

III

View

I View from below
II Front view
III side view
IV isometric view

Specifications

Article no.	System	Grid dimensions	Length (A) [mm]	Width (B) [mm]	heating water content [l]	cooling water content [l]	Weight [kg]
326116262111*	2-pipe	600 x 600 mm	1198	598	---	1.9	28
326116462111*	4-pipe	600 x 600 mm	1198	598	0.4	1.5	28
326126262111*	2-pipe	625 x 625 mm	1240	620	---	1.9	29
326126462111*	4-pipe	625 x 625 mm	1240	620	0.4	1.5	29

Performance data

System	Air outlet	Control voltage	Air flow	Cooling output, total[1]	Cooling output, sensible	Outlet air temperature	Mass Flow cooling	Pressure loss cooling	Heat output[2]	Outlet air temperature	Mass Flow heating	Pressure loss heating	Power consumption	Current consumption	Sound pressure level[3]	Sound power level
		[V]	[m³/h]	[W]	[W]	[°C]	[l/h]	[kPa]	[W]	[°C]	[l/h]	[kPa]	[W]	[mA]	[dB(A)]	[dB(A)]
2-pipe	two-sided air outlet	10	415	3010	2086	11.4	517	31.0	5852	62.5	516	29.5	20	210	42	50
		8	357	2622	1818	11.2	451	24.4	5085	63.0	448	23.1	16	171	37	45
		6	246	1876	1298	10.7	322	13.6	3607	64.1	318	12.7	10	118	28	36
		4	136	1108	755	9.8	190	5.5	2071	65.9	182	4.9	7	88	19	27
		2	70	641	423	8.4	110	2.1	1113	67.7	98	1.7	6	79	15	23
4-pipe	two-sided air outlet	10	415	2442	1750	13.9	420	17.9	3091	42.4	272	1.5	20	210	42	50
		8	357	2138	1531	13.7	367	14.2	2794	43.6	246	1.2	16	171	37	45
		6	246	1550	1105	13.1	266	8.1	2173	46.6	192	0.8	10	118	28	36
		4	136	943	658	12.0	162	3.4	1426	51.6	126	0.4	7	88	19	27
		2	70	573	382	10.1	99	1.5	868	57.2	77	0.2	6	79	15	23

Use our calculation tools on our website to easily calculate heat outputs and other technical data with just a few clicks!
▸ https://www.kampmanngroup.com/hvac/products/fan-coils/kadeck#Calculate-performance-data

1) at CHW 7/12 °C, t_{L1} = 27 °C, 48% relative humidity
2) at LPHW 75/65 °C, t_{L1} = 20 °C
3) The sound pressure levels were calculated with an assumed room insulation of 8 dB(A). This corresponds to a distance of 2 m, a room volume of 100 m³ and a reverberation time of 0.5 s (in accordance with VDI 2081)

03 Design information

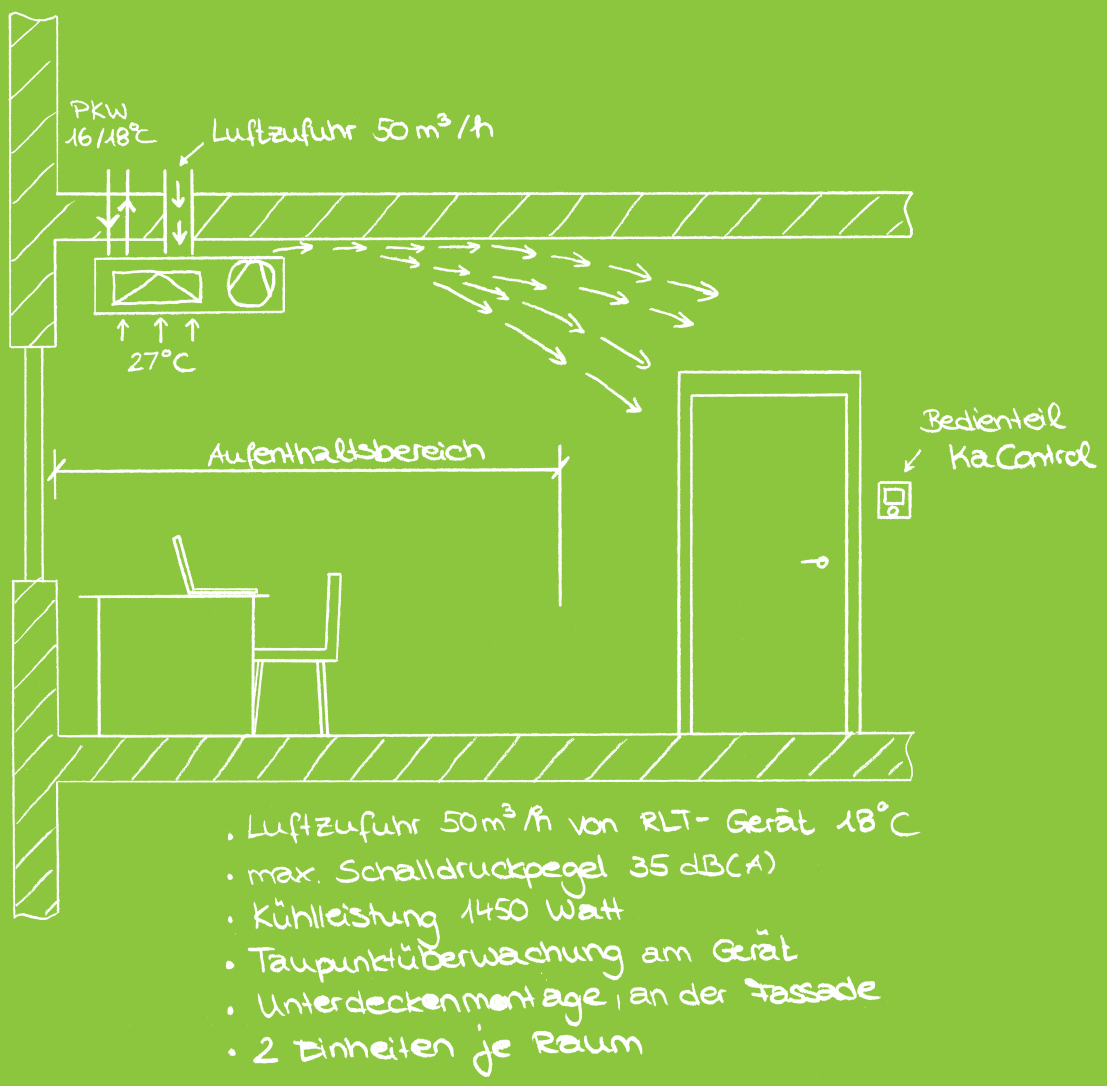

- Luftzufuhr 50 m³/h von RLT-Gerät 18°C
- max. Schalldruckpegel 35 dB(A)
- Kühlleistung 1450 Watt
- Taupunktüberwachung am Gerät
- Unterdeckenmontage, an der Fassade
- 2 Einheiten je Raum

Information on planning and design

The installation position and the air discharge direction, as well as the choice of dry or wet cooling, depend on a range of different factors.

Cooling output

The existing cooling load is calculated in line with VDI 2078 (VDI regulations governing cooling loads).

Depending on the available cold water supply (CPW) and the desired or required cooling output, select the dry or wet version of the KaDeck. The dry version can be selected with high system temperatures above the dew point (e.g. CPW 16 /18 °C).

The components of the KaDeck for dry cooling are designed to maximise the cooling output with high system temperatures. A condensate pump is not included.
A dew point monitor is optionally available for the dry cooling version.

The wet cooling version should be used for high cooling demands and must be used at system temperatures below the dew point. It includes a condensate tray and pump.

Ceiling type

The decision about whether to hang the unit from the ceiling or inside the false ceiling is determined by the architecture of the building. Select the ceiling-mounted version in rooms with no false ceiling. These units are suspended 4 cm below the unfinished ceiling. Please contact us for more information about the ceiling-mounted version. Use the suspended ceiling version if the building has a suspended ceiling. This obviates the need for additional maintenance inspection openings. The unit can be installed in two grids of a suspended ceiling grid.

Air discharge direction

The choice is generally between a 1-sided and 2-sided air outlet. Choose the version that prevents draughts. Select the appropriate unit taking into account where people will be standing and sitting. If the distance from the wall to the air outlet is less than 3.0 m, this can create draughts at higher fan speeds. Whenever possible, the airflow into the space should be lengthways.

If there are desks in the middle of a room for example, a unit with a 2-sided discharge should be positioned above them. If desks are positioned along the windows, then a unit with a 1-sided discharge should be selected and installed on the façade.

The supply to the units can or must also be taken into consideration. A 1-sided discharge unit is also beneficial if the unit is to be supplied from the corridor area. The unit is then positioned on the corridor side. However attention must be paid to the avoidance of draughts.

Choice of installation site:

- Positioning of the cooling unit to blend in with the architecture and environment (e.g. ceiling lights)

Avoid:

- Restricted air circulation due to lamps, furniture or shelves
- Obstacles to air distribution and air intake
- Electronic appliances below the KaDeck

Unit layouts in the room

The KaDeck is available as a one-sided or two-sided version. The outer dimensions of both versions are identical. The following layouts work depending on the geometry of the room and use:

The one-sided version is installed on the window or corridor side.

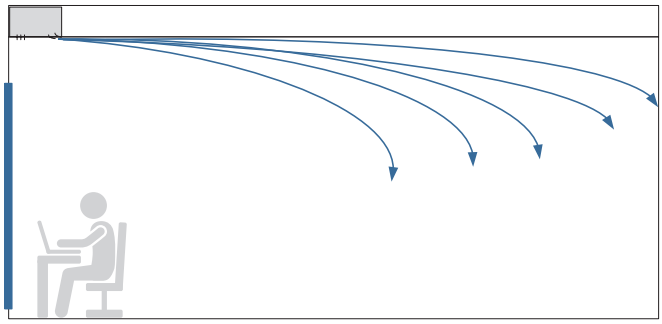

Window- or corridor-side arrangement

The two-sided version is installed in the centre of the room.

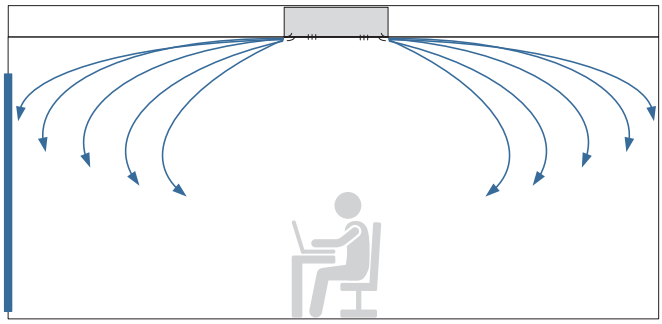

Room-centre arrangement

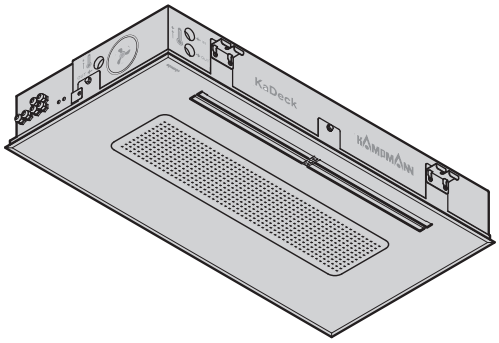

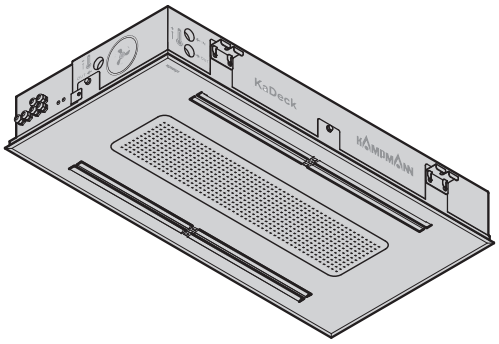

Temperature stratification in heating mode

Heating mode

The KaDeck has been primarily developed for cooling mode. The special air discharge geometry, which prevents draughts in cooling mode, leads to temperature stratification in heating mode. The higher the system temperatures, the greater the degree of stratification and therefore also the discharge temperatures. For this reason, the KaDeck should be used as a low temperature heating system. Moreover, the air outlet should not exceed a maximum height of 3 m.
The maximum room or installation height of ceiling-mounted units that are also used in heating mode can be significantly lower, depending on the room shape, type of ceiling, use of the room and system temperatures.

Temperature stratification

The figure below shows the temperature stratification that occurs at a setpoint temperature of 20 °C at a height of 1.1 m and a KaDeck air discharge height of 3.0 m. The temperatures in the occupied area below the unit vary depending on the fan stage and system temperatures. This needs to be considered at the planning stage.

	System temperatures 35/30 °C			System temperatures 55/45 °C			System temperatures 75/65 °C		
Speed	Stage 1	Stage 3	Stage 5	Stage 1	Stage 3	Stage 5	Stage 1	Stage 3	Stage 5
2.5 m	20.7 °C	21.3 °C	21.9 °C	20.8 °C	23.5 °C	24.8 °C	20.9 °C	25.5 °C	28.6 °C
1.8 m	20.3 °C	20.9 °C	21.1 °C	20.1 °C	20.7 °C	21.5 °C	20.1 °C	20.4 °C	21.7 °C
1.1 m	Room temperature 20 °C								
0.5 m	19.7 °C	19.0 °C	18.9 °C	19.7 °C	19.4 °C	19.2 °C	19.6 °C	19.5 °C	19.3 °C

Data for false ceiling unit, 2-sided discharge, dry cooling version, room temperature 20 °C in the reference room according to DIN EN 16430

External fresh air supply

Primary air spigots for the fresh air supply

KaDeck units are supplied with up to two primary air spigots. They enable pre-conditioned primary air to be fed into the KaDeck and the room. The preconditioned air needs to be cleaned and fed into the room at a minimum temperature of 14 °C, and a maximum temperature of 25 °C. The max. sound power level is 30 dB(A) when a maximum primary air volume is fed in.

Maximum air volume per unit
When using one spigot: 60 m³/h
When using both spigots: 120 m³/h

The maximum primary air volume is 60 m³ with one-sided units, and 120 m³ with two-sided units.

Pressure losses of primary air spigots

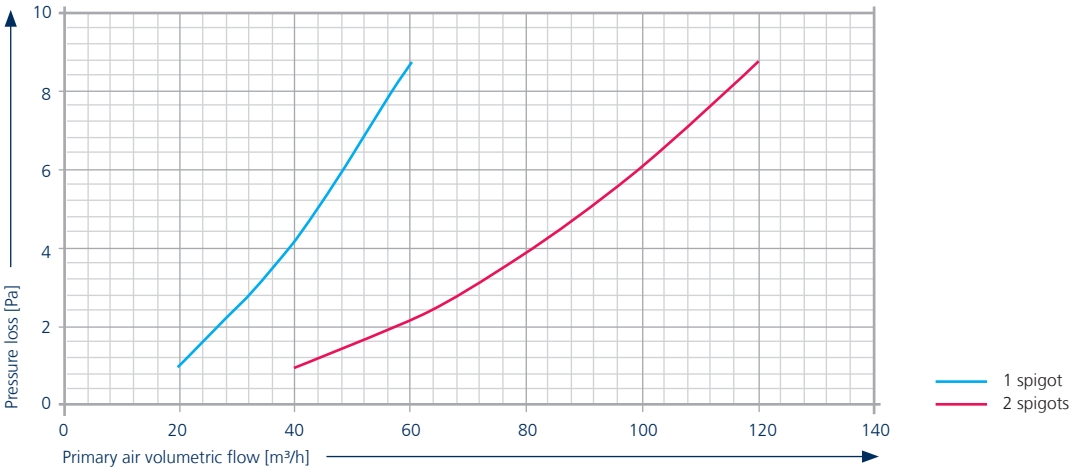

Mounting position of primary air spigots

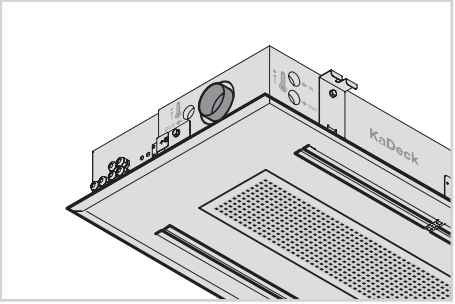

Primary air spigot, side view

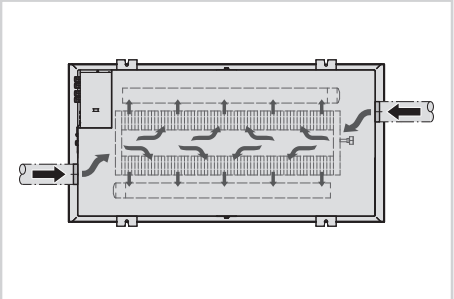

Primary air spigot, connected on both sides

Wet and dry cooling versions

Distinction

There are two versions of the KaDeck: one for dry cooling and one for wet cooling.

Never connect dry cooling units to an on-site cold water system in which the temperature could fall below the dew point!

A dew point monitor can be fitted at the factory for KaDeck dry cooling versions with KaControl control variant.

This monitors any condensate produced on the heat exchanger. If the temperature falls below the dew point on the heat exchanger, the dew point monitor closes the cooling valve.

The dew point monitor acts as a safety device, rather than a dew point controller.
The cold water system should generally be operated above the dew point even when a dew point sensor is used!

Condensate drain

Wet cooling versions of the KaDeck include a built-in condensate pump with floatswitchtodrainoff any condensate produced. The condensate discharged from the condensate pump hose must be drained from the KaDeck with a gradient of 1 %. The condensate must be collected in a pool pump on site if it has to be drained higher than is possible with the integrated pump.

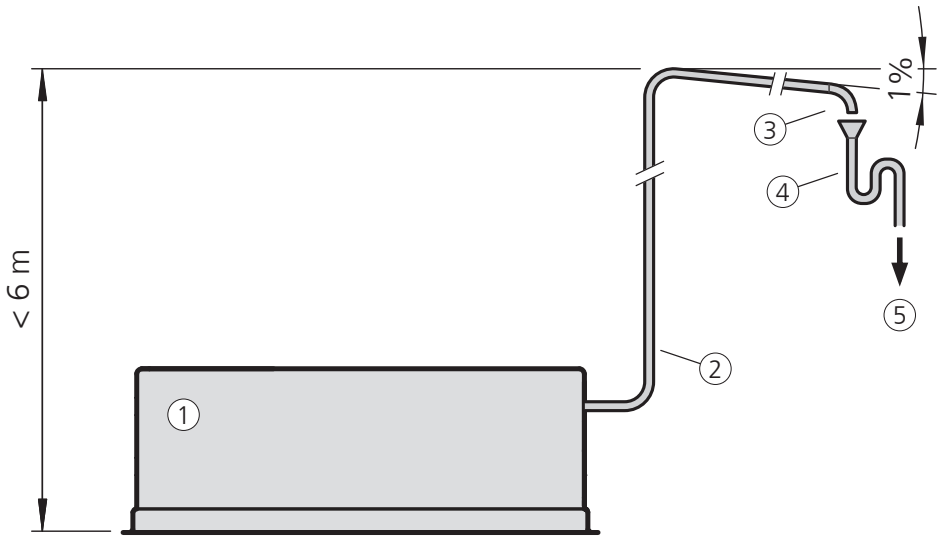

1. KaDeck
2. Condensate line
3. Free outlet (DIN EN 1717)
4. Odour trap
5. Waste water network

Versions and adaptations

Not every building project has the same requirements. The KaDeck offers a wide range of adaptation options.

Different ceiling grids

A frame is available that fits the 625x625 mm grid dimensions, and a 600x600 mm version is also possible.

Colour

The colour can be individually adapted to the customer's requirements.

The design cover panel and frame are made of sheet steel which be adapted to the customer's requirements at the Kampmann powder-coating facility.

Project solutions

The design of the KaDeck itself is also variable. If no false ceiling is available, the ceiling-mounted version is a good choice for many projects. Special project solutions have also been realised, particularly for the refurbishment of existing buildings. Simply get in touch with us!

Examples of colour options

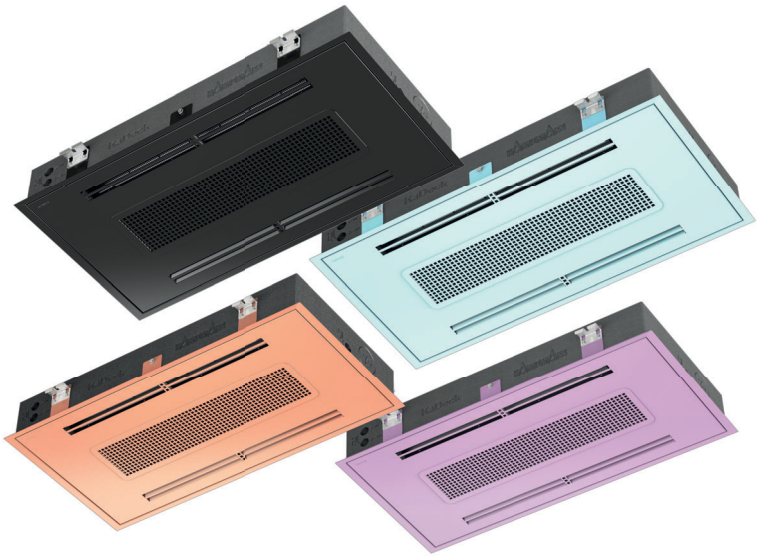

Example of the ceiling-mounted solution

04 Controls

Control of KaDeck, electromechanical version

Product features
In electromechanical versions, all factory-fitted actuators are wired to the terminal on the PCB. Irrespective of the control, 24 V DC valve actuators are required, which also need to be connected to the terminals of the PCB. The valve actuators on the PCB can either be controlled with 230 V AC or 24 V DC. A condensate alarm is accompanied by forced closing of the cooling valve.

Fans
The speed of the EC fans can be infinitely controlled via a 0–10 V DC signal. The "intelligent" motor electronics detects possible motor malfunctions and automatically switches off the fan.
A motor malfunction and condensate alarm are displayed by the associated LED on the PCB. There is also a potential-free common fault signal contact on the PCB for external evaluation.

Control units
Three different control units are available for operation and control.

Room thermostat type 30155

Room thermostat for 3-stage speed control for on-wall installation with understated design

Product features:
- 2- and 4-pipe applications, thermal valve actuators 230 V AC Open/Closed, normally closed
- ABS plastic housing, functional and robust design, pure white, similar to RAL 9010, for surface-mounting on a flush back box or on-wall in surface-mounted frame (accessory)
- Simple operation using a large rotary dial for temperature setting with mechanical range limitation of the temperature setpoint, operating mode selector switch, Standby, Manual fan, Automatic fan, 3-stage switch for pre-selecting the fan speed when the operating mode selector switch is in the "Manual fan" position
- Control input for heating/cooling switch-over with 2-pipe systems
- Control input can either be set to Comfort/ECO or ON/OFF switch-over
- Room frost protection function < 5 °C ➞ heating valve open, fan stage 3
- Internal or external room temperature sensor (accessory) can be used
- Parallel operation of a maximum of 2 units is possible

Clock thermostat, type 30256

Clock thermostat for fan speed control for on-wall installation with understated design

Product features:
- 2- and 4-pipe applications, thermal valve actuators 230 V AC Open/Closed, normally closed
- ABS plastic housing, rugged design, pure white, similar to RAL 9010, for surface-mounting on a flush back box, can be integrated in switch product range with grid size 50 x 50 mm
- Display with adjustable backlight
- Operation using 4 sensor keys
- Timer with automatic summer/winter switch-over
- Control input for heating/cooling switch-over with 2-pipe systems
- Control input can either be set to Comfort/ECO or ON/OFF switch-over
- Unit frost protection function < 5 °C ➞ valve(s) open
- Internal or external room temperature sensor (accessory) can be used
- Parallel operation of a maximum of 2 units is possible

Climate controller type 148941 / type 148942 / type 148943 / type 148944

The climate controller is a control unit with a high-quality glass surface

Product features:

- 2- and 4-pipe applications, thermal valve actuators 230 V AC Open/Closed, normally closed
- 2.5" LCD display
- High-quality glass surface with capacitive keys
- LED ring as key feedback
- The value to be displayed (room temperature, setpoint, setpoint offset) can be selected
- Automatic LED backlight
- Internal or external room temperature sensor (accessory) can be used
- Room temperature control
- Programmable room frost protection function ➞ RT < 8 °C = heating valve open, fan stage 1
- Programmable unit frost protection function ➞ RT < 4° C = valve(s) open, fan off
- Standby mode
- Eco/day switch-over
- Manual or automatic mode
- Function display on display
- Alarm display on display
- Timer program with 3 time channels, each with 4 switch-over points
- Cleaning mode
- Programmable language: German or English
- Modbus RTU slave interface for connection to higher-level building automation system (BAS) (only with type 148943 and type 148944)
- 3 control inputs with type 148941 and type 148942 or 2 control inputs with type 148943 and type 148944 (programmable functions e.g. window contact, motion detector, heating/cooling switch-over), external room sensor
- Password-protected programming level
- Surface-mounted on a flush box
- Pure white (type 148941 and type 148943) or black (type 148942 and type 148944)
- Parallel operation of a maximum of 2 units is possible

Operation using on-site systems

Control via analogue and digital signals instead of Kampmann control units is possible. The following analogue and digital inputs and/or outputs are required:

- Speed control via a 0-10 V DC signal, the fan starts up safely at 1.5 V DC
- Control input for the detection of any possible motor malfunction ➞only with electromechanical version with alarm contact (*01M)
- Control input for the detection of a possible condensate alarm ➞only with electromechanical version with condensate pump or dew point sensor
- Analogue or digital signals to control the fan drive(s) according to the drive version

Electrical data for KaDeck, electromechanical version (*00)

Article number	Nominal voltage	Mains frequency	Active power	Nominal current	Analogue input Ri	IP IP class	Protection class
	[V]	[Hz]	[W]	[A]	[kΩ]		
3261xxx11xxx	230	50	16	0.13	100	20	I
3261xxx61xxx	230	50	24	0.20	100	20	I
3261xxx12xxx	230	50	27	0.22	50	20	I
3261xxx62xxx	230	50	35	0.29	50	20	I

Control of KaDeck, KaControl version
The all-inclusive solution!

Product features
Units configured for operation with KaControl are fully wired and fitted with all electrical components ready for connection (with the exception of optional accessories).
The built-in, high-performance, programmable KaControl microprocessor control provides all the functions the KaDeck needs.
The KaController control unit is the "face" of the KaControl.
A group of up to six units can be created using a KaController control unit without the need for additional addressing.
Optional plug-in interface cards are available for connection to higher-level control systems.

Fans
The speed of the EC fans used in the units is controlled by a 0-10 V DC signal from the KaControl. The "intelligent" motor electronics detects possible motor malfunctions and automatically switches off the fan. If a motor in the unit to which the KaController is connected malfunctions, this is displayed on the KaController. A motor malfunction and condensate alarm are also displayed by the associated LED on the PCB. There is also a potential-free motor malfunction signal contact and/or condensate alarm on the PCB for external evaluation.

Control unit
Various versions of the KaController control unit are available for operation and control.

KaController
Type 3210001

Type 3210002

Type 3210006

The KaController offers maximum operating convenience with a large-format display, one-touch operation and optional side function keys for quick access. Based on the principle of "as little as possible, as much as required", even untrained users can intuitively get to grips with the control options. Pictograms are used in the displays and they are therefore language-independent.
The basic functions can easily be adjusted at the KaController.

Product features of the KaController

- Plastic housing, colour similar to RAL 9010 (type 3210001 and 3210002) or black (type 3210006) for surface-mounting on a flush back box or on-wall with surface-mounted frame (accessory)
- High-quality design of room control units, large LCD multifunctional display with energy-saving, automatic LED backlight
- Push-turn navigator dial with endless turn/lock function
- Side function keys for quick access (only with type 3210002)
- Integral temperature sensor
- Individually adjustable basic display
- Display of fault alarms
- Built-in weekly switching program
- Password-protected programming level

KaControl control functions

The programmable KaControl microprocessor control offers a wealth of functions. The following functions of the KaDeck product are necessary and are therefore preset at the factory:

- 2- and 4-pipe applications, thermal valve actuators 24 V DC Open/Closed, normally closed
- Room temperature control with 2-point valve control and demand-led fan control in automatic operation or optional fixed stage selection
- Room frost protection function ➞ RT < 8 °C = heating valve open, fan stage 1
- Unit frost protection function ➞ RT < 4 °C = valve(s), fan off
- Internal or external room temperature sensor (accessory) can be used
- If a unit alarm is triggered on a device to which the KaController room control unit is connected, e.g. a motor malfunction or condensate alarm, this is detected by the KaControl and indicated on the KaController control unit
- Control input for heating/cooling switch-over with 2-pipe systems
- Control input can either be set to Comfort/ECO or ON/OFF switch-over
- 24 V DC/max 0.5 A switch output programmable to unit alarm, heat or cooling demand (only with 2-pipe applications)
- Sequential control of valve (Open/Closed) and fan speed via one (2-pipe) or two data points 0-10 V DC (4-pipe) ➞ only with control without KaController
- One slot for optional interface cards for connection to a higher-level building automation system ➞ optionally Modbus, KNX, BACnet (accessory)
- Password-protected programming level
- Up to 6 units can be operated in parallel, can be extended up to a maximum of 30 units using additional CANbus cards type 3260701 (accessory) per unit

Any additional functions required can be programmed and correspondingly coordinated.

Electrical data for KaDeck, KaControl version (*C1)

Article number	Nominal voltage	Mains frequency	Active power	Nominal current	Analogue input Ri	IP IP class	Protection class
	[V]	[Hz]	[W]	[A]	[kΩ]		
3261xxx11xxxC1	230	50	18	0.15	20	20	I
3261xxx61xxxC1	230	50	26	0.22	20	20	I
3261xxx12xxxC1	230	50	29	0.24	20	20	I
3261xxx62xxxC1	230	50	37	0.31	20	20	I

KaControl – Integration into intelligent building networks (IoT)

KaControl offers a wealth of options for integration into established communication networks. Various building automation strategies can be configured using different options.

Individual switching of units

Units equipped with the KaControl control system can be directly integrated into on-site networks using optional communication interfaces. Control and monitoring is carried out via fixed data points. The units can be operated via the KaController control unit or the corresponding control units in the network.

Connection of groups

Up to six units equipped with the KaControl control system can be operated in a single group. Groups of units can be directly integrated into on-site networks using optional communication interfaces. Control and monitoring is carried out via fixed data points. A group can be operated via the KaController or via control units in the network.

Communication interfaces

The following communication interfaces can be supplied separately or factory-fitted.

- Modbus RTU
- KNX
- BACnet IP

Note:

More information on integration into intelligent building networks and the associated communication interfaces is available on request!

KaControl system controller

The optional modbus interface can be used to create systems by interconnecting units equipped with the KaControl control system individually or in groups with factory-programmed higher-level Kampmann system controllers.

KaControl SEL4.0 control panel

- For the monitoring and control of up to 60 Kampmann secondary air units, split into up to 25 groups (zones), maximum 6 units per group
- Central or zone-wise heating/cooling switch-over
- Dedicated timer program per zone/room
- Integrated web server
- Optional BACnet licence is available

KaControl AUL outside air control panel

- One Kampmann ventilation system
- Up to 60 secondary air units or door air curtains split into up to 10 groups (zones), identical units required within a group, up to 6 units per group
- Optional: KaController control unit for each group
- Central heating (winter)/cooling (summer) switch-over of secondary air units or heating (winter)/ventilation (summer)
- 5 timer programs can be assigned to groups
- Optional: BACnet IP gateway for connection to higher-level control systems for the units/zones

KaControl visualisation

- Up to 100/300 units
- Optional: KaController control unit for each group
- Central heating (winter)/cooling (summer) switch-over of secondary air units or heating (winter)/ventilation (summer) of door air curtains
- Central timer programs
- Visualisation of Kampmann secondary air units, door air curtains and ventilation systems

Note:
More information on KaControl system controllers is available on request!

Wiring diagram for KaControl control panel SEL 4.0

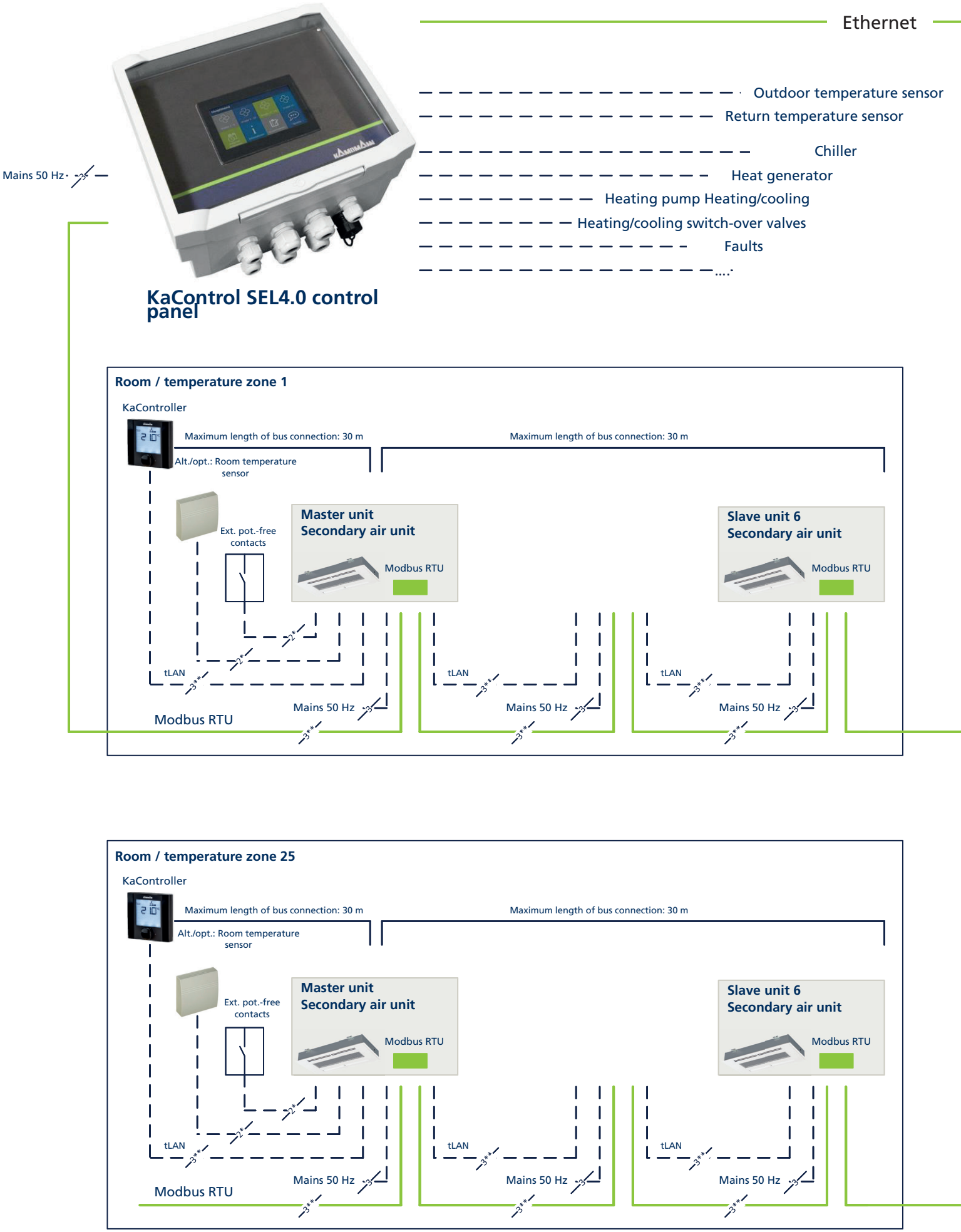

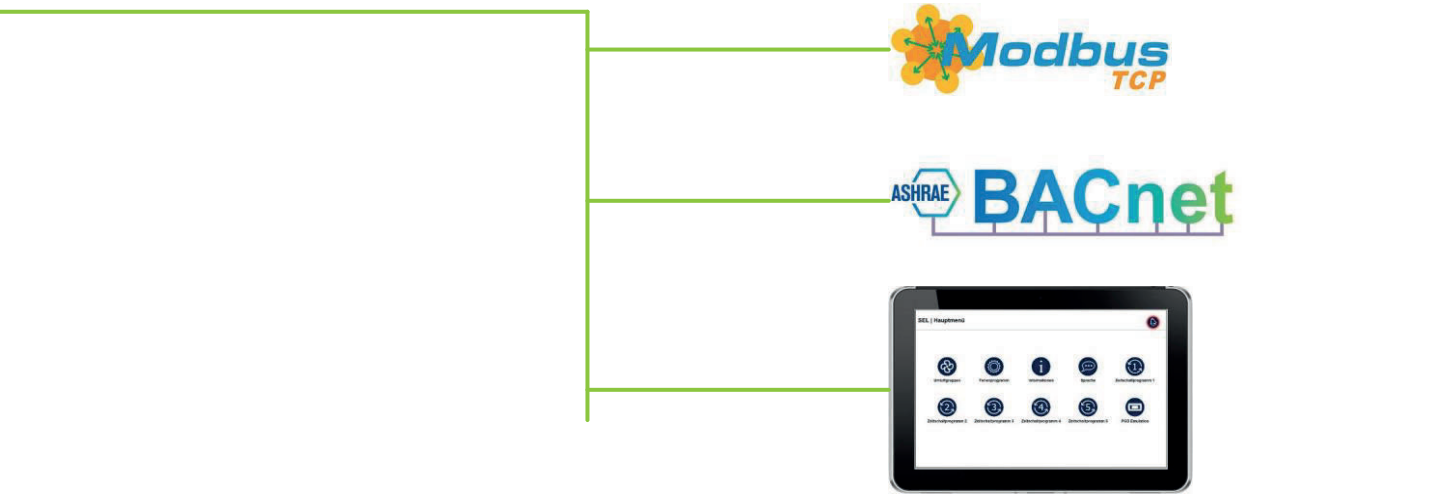
Modbus
TCP
ASHRAE
BACnet

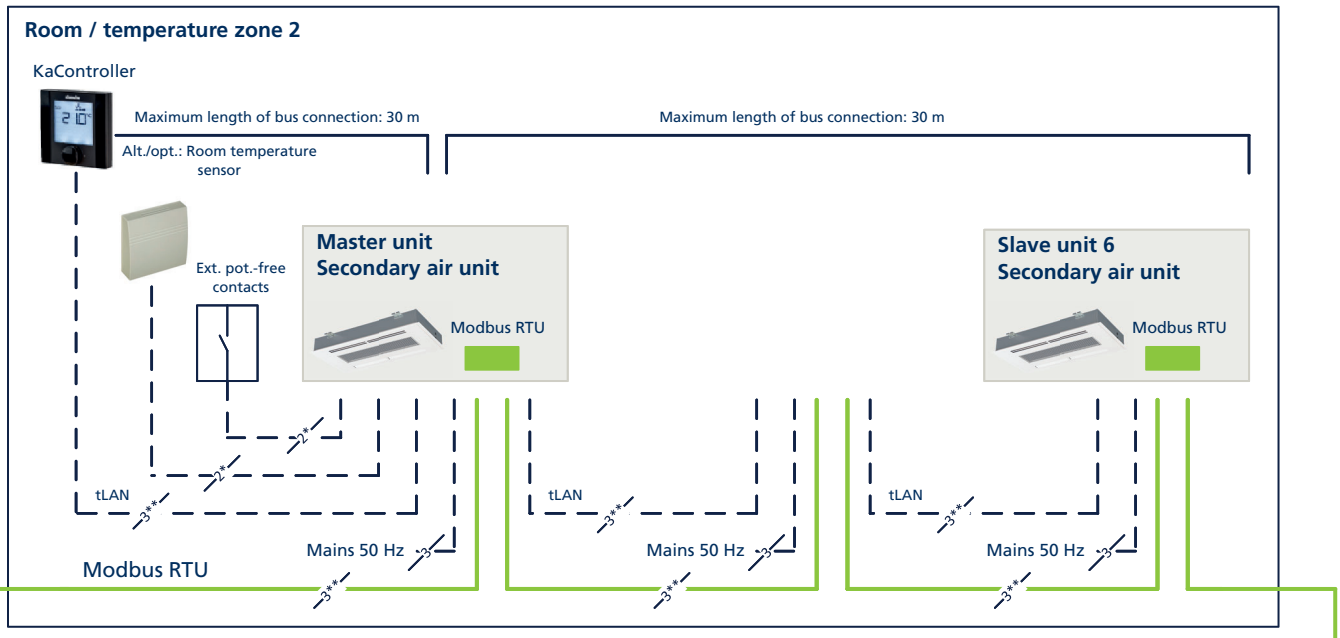
Room / temperature zone 2
KaController
Maximum length of bus connection: 30 m
Maximum length of bus connection: 30 m
Alt./opt.: Room temperature sensor
Ext. pot.-free contacts
Master unit
Secondary air unit
Modbus RTU
Slave unit 6
Secondary air unit
Modbus RTU
tLAN
tLAN
tLAN
Mains 50 Hz
Mains 50 Hz
Mains 50 Hz
Modbus RTU

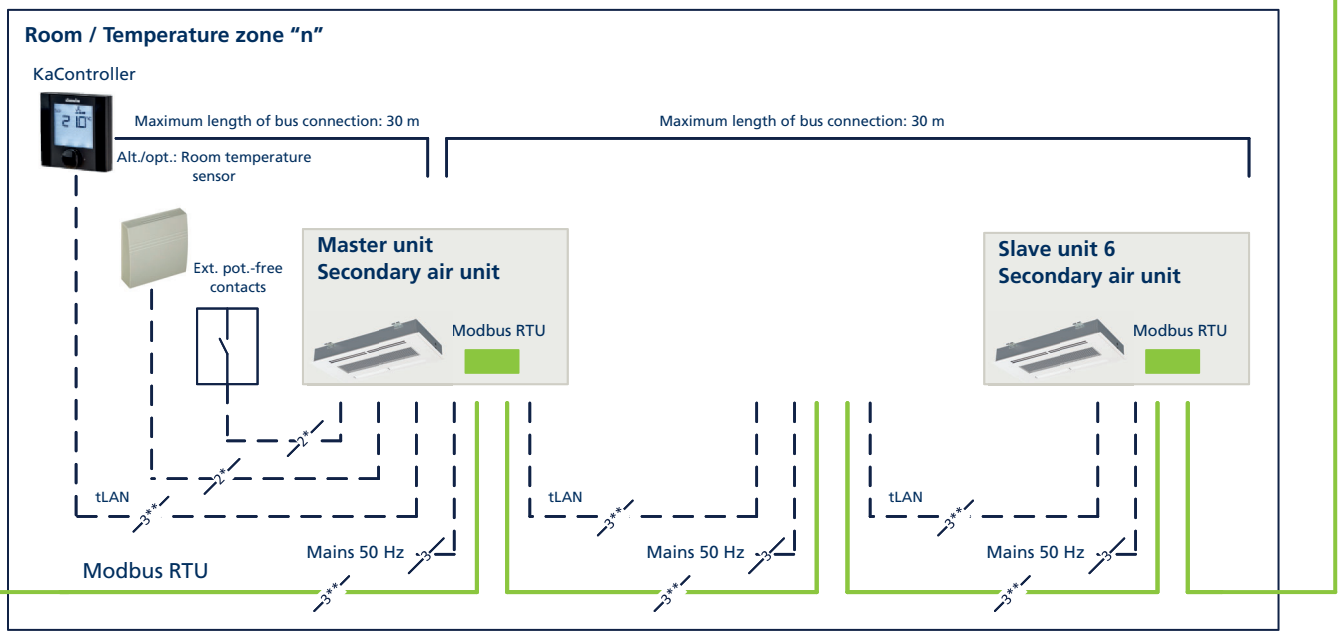
Room / Temperature zone "n"
KaController
Maximum length of bus connection: 30 m
Maximum length of bus connection: 30 m
Alt./opt.: Room temperature sensor
Ext. pot.-free contacts
Master unit
Secondary air unit
Modbus RTU
Slave unit 6
Secondary air unit
Modbus RTU
tLAN
tLAN
tLAN
Mains 50 Hz
Mains 50 Hz
Mains 50 Hz
Modbus RTU

05 Ordering information

Accessories

Article	Article	Properties	Dimensions	Suitable for	Article no.
			[mm]		
Control accessories KaControl					
	KaController	with one-button operation, 24 V wall-mounted room control unit, with integral room temperature sensor, Protection class IP 30, Temperature setting range 8 - 35 °C, Colour similar to RAL 9010 pure white, made of resistant PVC, Type 3210001	86 x 52 x 86	all units with control option KaControl -C1	**196003210001**
	KaController	with one-button operation, 24 V wall-mounted room control unit, with integral room temperature sensor, Protection class IP 30, Temperature setting range 8 - 35 °C, Colour similar to RAL 9017 traffic black, made of resistant PVC, Type 3210006	86 x 52 x 86	all units with control option KaControl -C1	**196003210006**
	KaController	with side operating keys, 24 V wall-mounted room control unit, with integral room temperature sensor, Protection class IP 30, Temperature setting range 8 - 35 °C, Colour similar to RAL 9010 pure white, made of resistant PVC, Type 3210002	86 x 52 x 86	all units with control option KaControl -C1	**196003210002**
	Room temperature sensor	Wall-mounted, Surface-mounted, Protection class IP 30, Colour similar to RAL 9010 pure white, made of plastic, Type 3250110 Is the KaController installation site suitable for a temperature measurement? - If it is not suitable, e.g. behind a curtain, then a KaControl room temperature sensor should be chosen for each group!	101 x 110 x 23	all units with KaControl -C1 and climate controller art. no. 19600014894*	**196003250110**
	Clip-on pipe sensor	to detect the medium temperature, Protection class IP 67, Temperature setting range -20 - 70 °C, Colour black, Type 3250115 Is there a risk of frost, e.g. due to the ingress of cold air – if so, then a KaControl clip-on pipe sensor should be chosen for each unit! heating/cooling changeover function only in conjunction with 3-way valve!	5 x 6 x 3000	all units with KaControl -C1 and climate controller art. no. 19600014894*	**196003250115**
	Serial KNX card	for integration into a KNX/EIB network, interface PCOS00KXN0, Type 3260702 The communication card slots into the free interface on the PCB.	35 x 20 x 80	all units with control option KaControl -C1	**196003260702**

CONTINUED

Accessories

Article	Article	Properties	Dimensions	Suitable for	Article no.
			[mm]		
	Serial CANbus card	to increase the number of units in a single-circuit system from 7 to a maximum of 30 units, one required per unit, Extension of the cable length from the first to the last unit from 30 m to 500 m, Can only be used with the KaControl -C1 control version!The room temperature cannot be recorded by a room sensor when using CanBus cards., Type 3260301	35 x 30 x 60	all units with control option KaControl -C1	**196003260301**
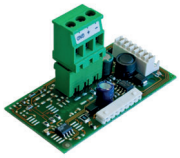	Serial Modbus card	Type 3260101 Required for each device for connection to KaControl panels or on-site Modbus networks. The communication card slots into the free interface on the PCB.	31 x 12 x 61	all units with control option KaControl -C1	**196003260101**

CONTINUED

Accessories

Article	Article	Properties	Dimensions	Suitable for	Article no.
			[mm]		
Control accessories electromechanical 230 V					
	Room thermostat	Heating/Cooling, 2- and 4-pipe, 3-stage. Only in conjunction with valves/valve kits with actuator, with OFF/Manual/Automatic fan switchover, 230 V AC, Open/Closed, Surface-mounted, Protection class II, Protection class IP 30, Temperature setting range 5 - 30 °C, Colour similar to RAL 9010 pure white, Type 30155 optional connectible, remote sensor art. no. 196000148921 can optionally be connected, clip-on sensor art. no. 196000148922	110 x 111 x 26	EC units electromechanical, 5 Katherm HK Trench Technology, 5 TOP, Ultra or Ultra Allround Unit Heaters, 5 Venkon or PowerKon LT Fan Coils, 5 KaCool D AF, KaCool W or KaDeck Fan Coils	**196000030155**
	Clock thermostat	Heating/Cooling, 2- and 4-pipe, continuously variable, with LCD operating menu and integrated timer program, 230 V AC, 1 W, flush-mounted, Protection class II, Protection class IP 30, Colour similar to RAL 9010 pure white, Type 30256 optional connectible, remote sensor art. no. 196000148921 can optionally be connected, clip-on sensor art. no. 196000148922	85 x 46 x 81	EC units electromechanical, 5 TOP, Ultra or Ultra Allround Unit Heaters, 5 Venkon Fan Coils, 5 KaCool D AF, KaCool W or KaDeck Fan Coils	**196000030256**
	Climate Controller	Heating/Cooling, 2- and 4-pipe, Without Modbus, only with valves/valve kits, continuously variable, with LCD operating menu and integrated timer program, 230 V AC, Open/Closed, Surface-mounted, Protection class IP 30, Temperature setting range 0 - 50 °C, Colour similar to RAL 9010 pure white, Type 148941	78 x 140 x 15	EC units electromechanical, 4 Katherm HK Trench Technology, 4 KaCool D AF, KaCool W, Venkon or KaDeck Fan Coils, 4 Ultra Allround Unit Heaters	**196000148941**
	Climate Controller	Heating/Cooling, 2- and 4-pipe, Without Modbus, only with valves/valve kits, continuously variable, with LCD operating menu and integrated timer program, 230 V AC, Open/Closed, Surface-mounted, Protection class IP 30, Temperature setting range 0 - 50 °C, Colour similar to RAL 9004 signal black, Type 148942	78 x 140 x 15	EC units electromechanical, 4 Katherm HK Trench Technology, 4 KaCool D AF, KaCool W, Venkon or KaDeck Fan Coils, 4 Ultra Allround Unit Heaters	**196000148942**

CONTINUED

Accessories

Article	Article	Properties	Dimensions [mm]	Suitable for	Article no.
	Climate Controller	Heating/Cooling, 2- and 4-pipe, with Modbus, only with valves/valve kits, continuously variable, with LCD operating menu and integrated timer program, 230 V AC, Open/Closed, Surface-mounted, Protection class IP 30, Temperature setting range 0 - 50 °C, Colour similar to RAL 9010 pure white, Type 148943	78 x 140 x 15	EC units electromechanical, 4 Katherm HK Trench Technology, 4 KaCool D AF, KaCool W, Venkon or KaDeck Fan Coils, 4 Ultra Allround Unit Heaters	**196000148943**
	Climate Controller	Heating/Cooling, 2- and 4-pipe, with Modbus, only with valves/valve kits, continuously variable, with LCD operating menu and integrated timer program, 230 V AC, Open/Closed, Surface-mounted, Protection class IP 30, Temperature setting range 0 - 50 °C, Colour similar to RAL 9004 signal black, Type 148944	78 x 140 x 15	EC units electromechanical, 4 Katherm HK Trench Technology, 4 KaCool D AF, KaCool W, Venkon or KaDeck Fan Coils, 4 Ultra Allround Unit Heaters	**196000148944**

Valve kits

	Valve kit	Connection R1/2" male thread, 2-pipe, Actuator, return shut-off valve and flexible connection, corrugated stainless steel pipe flow and return, 2-way valve, pre-settable, 24 V 2-point actuator, 50 Hz, Protection class IP 54, water with glycol <50%	180 x 30 x 523	KaDeck Fan Coils	**326007110001**
	Valve kit	Connection R1/2" male thread, 4-pipe, Actuator, return shut-off valve and flexible connection, corrugated stainless steel pipe flow and return, 2-way valve, pre-settable, 24 V 2-point actuator, 50 Hz, Protection class IP 54, water with glycol <50%	180 x 30 x 523	KaDeck Fan Coils	**326007110011**
	Differential pressure-independent valve kit	Connection R1/2" male thread, 2-pipe, Actuator, return shut-off valve and flexible connection, corrugated stainless steel pipe flow and return, 24 V 2-point actuator, 50 Hz, Protection class IP 54, water with glycol <50%, supplied separately	180 x 30 x 523	KaDeck Fan Coils, Flow volume Cooling (min./max.) 35 - 420 l/h	**326007110003**
	Differential pressure-independent valve kit	Connection R1/2" male thread, 2-pipe, Actuator, return shut-off valve and flexible connection, corrugated stainless steel pipe flow and return, 24 V 2-point actuator, 50 Hz, Protection class IP 54, water with glycol <50%, supplied separately	180 x 30 x 523	KaDeck Fan Coils, Flow volume Cooling (min./max.) 150 - 1050 l/h	**326007110005**

CONTINUED

Accessories

Article	Article	Properties	Dimensions [mm]	Suitable for	Article no.
	Differential pressure-independent valve kit	Connection R1/2" male thread, 4-pipe, Actuator, return shut-off valve and flexible connection, corrugated stainless steel pipe flow and return, 24 V 2-point actuator, 50 Hz, Protection class IP 54, water with glycol <50%, supplied separately	180 x 30 x 523	KaDeck Fan Coils, Flow volume Cooling (min./max.) 35 - 420 l/h	**326007110013**
	Differential pressure-independent valve kit	Connection R1/2" male thread, 4-pipe, Actuator, return shut-off valve and flexible connection, corrugated stainless steel pipe flow and return, 24 V 2-point actuator, 50 Hz, Protection class IP 54, water with glycol <50%, supplied separately	180 x 30 x 523	KaDeck Fan Coils, Flow volume Cooling (min./max.) 150 - 1050 l/h	**326007110015**

Attachments

	Primary air connection spigot	Connection DN 80, for the connection of external primary air	158 x 100 x 187	KaDeck fan coils with under-ceiling frame without recesses, KaDeck Fan Coils	**326007200001**
	Primary air connection spigot	Connection DN 80, for the connection of external primary air	110 x 110 x 40	KaDeck Fan Coils	**326007010104**
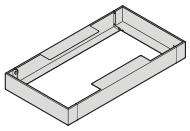	Under-ceiling frame	Connection Top, without recesses	750 x 165 x 1400	KaDeck Fan Coils	**326007200000**
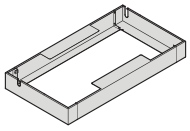	Under-ceiling frame	Connection Side, 2-pipe, without supply air spigots, 2-way valve, pre-settable	750 x 165 x 1400	KaDeck Fan Coils	**326007221100**
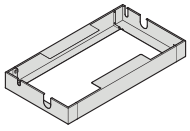	Under-ceiling frame	Connection Side, 2-pipe, supply air spigot on both sides, 2-way valve, pre-settable	750 x 165 x 1400	KaDeck Fan Coils	**326007221130**
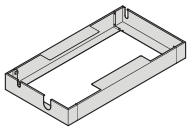	Under-ceiling frame	Connection Side, 2-pipe, electrical-side supply air spigot, 2-way valve, pre-settable	750 x 165 x 1400	KaDeck Fan Coils	**326007221120**

CONTINUED

Accessories

Article	Article	Properties	Dimensions [mm]	Suitable for	Article no.
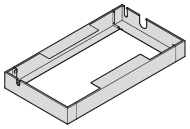	Under-ceiling frame	Connection Side, 2-pipe, water-side supply air spigot, 2-way valve, pre-settable	750 x 165 x 1400	KaDeck Fan Coils	**326007221110**
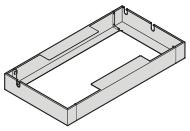	Under-ceiling frame	Connection Side, 2-pipe, without supply air spigots, Differential pressure-independent valve kit	750 x 165 x 1400	KaDeck Fan Coils	**326007221200**
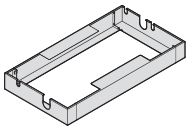	Under-ceiling frame	Connection Side, 2-pipe, supply air spigot on both sides, Differential pressure-independent valve kit	750 x 165 x 1400	KaDeck Fan Coils	**326007221230**
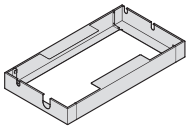	Under-ceiling frame	Connection Side, 2-pipe, electrical-side supply air spigot, Differential pressure-independent valve kit	750 x 165 x 1400	KaDeck Fan Coils	**326007221220**
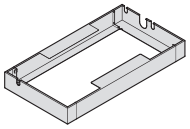	Under-ceiling frame	Connection Side, 2-pipe, water-side supply air spigot, Differential pressure-independent valve kit	750 x 165 x 1400	KaDeck Fan Coils	**326007221210**
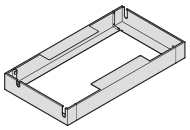	Under-ceiling frame	Connection Side, 4-pipe, without supply air spigots, 2-way valve, pre-settable	750 x 165 x 1400	KaDeck Fan Coils	**326007241100**
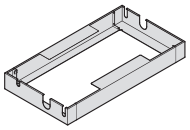	Under-ceiling frame	Connection Side, 4-pipe, supply air spigot on both sides, 2-way valve, pre-settable	750 x 165 x 1400	KaDeck Fan Coils	**326007241130**
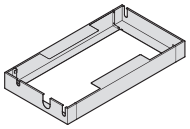	Under-ceiling frame	Connection Side, 4-pipe, electrical-side supply air spigot, 2-way valve, pre-settable	750 x 165 x 1400	KaDeck Fan Coils	**326007241120**
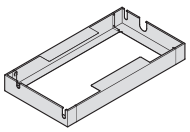	Under-ceiling frame	Connection Side, 4-pipe, water-side supply air spigot, 2-way valve, pre-settable	750 x 165 x 1400	KaDeck Fan Coils	**326007241110**
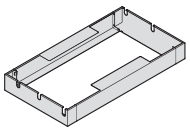	Under-ceiling frame	Connection Side, 4-pipe, without supply air spigots, Differential pressure-independent valve kit	750 x 165 x 1400	KaDeck Fan Coils	**326007241200**

CONTINUED

Accessories

Article	Article	Properties	Dimensions	Suitable for	Article no.
			[mm]		
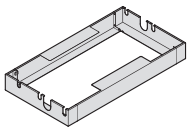	Under-ceiling frame	Connection Side, 4-pipe, supply air spigot on both sides, Differential pressure-independent valve kit	750 x 165 x 1400	KaDeck Fan Coils	**326007241230**
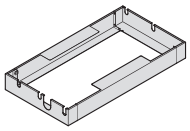	Under-ceiling frame	Connection Side, 4-pipe, electrical-side supply air spigot, Differential pressure-independent valve kit	750 x 165 x 1400	KaDeck Fan Coils	**326007241220**
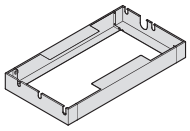	Under-ceiling frame	Connection Side, 4-pipe, water-side supply air spigot, Differential pressure-independent valve kit	750 x 165 x 1400	KaDeck Fan Coils	**326007241210**

Additional colours

	surcharge for RAL standard colour	Price per unit.		KaDeck Fan Coils	**326007010011**
	surcharge for RAL colour of your choice	Minimum quantity = 7 units per order and colour, The number of units below the minimum quantity must be requested and calculated separately. Price per unit.		KaDeck Fan Coils	**326007010021**
	surcharge for change of colour	of the powder-coating to the colour version quoted., The surcharge includes the conversion and cleaning of the powder-coating to the requested colour and will be charged once per project and call-off order.		KaDeck or KaDeck UC Fan Coils	**326007010010**

Kampmanngroup.com/kadeck

Kampmann GmbH & Co. KG
Friedrich-Ebert-Str. 128 – 130
49811 Lingen (Ems), Germany

T +49 591 7108-0
F +49 591 7108-300
E info@kampmann.de

456/07/24 EN